REV.	DESCRIPTION	APPROVED BY	DATE	ECN NO.
A				
B				
C				

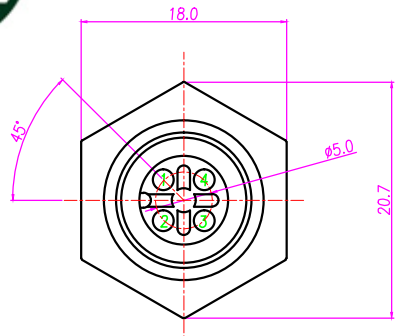

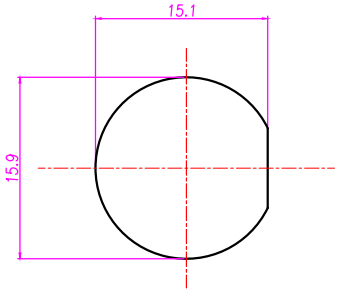

RECOMMENDPANEL CUT-OUT

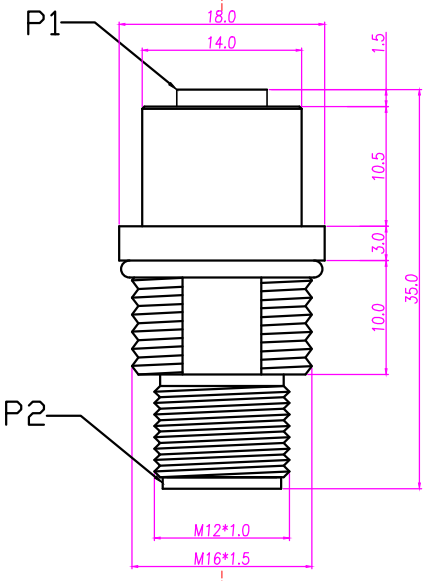

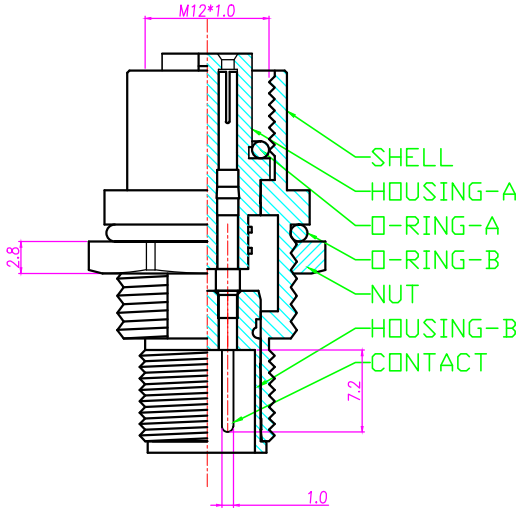

1. MATERIAL :
   1-1. HOUSING-A : PBT UL94V-0 ; COLOR : BLACK
   1-2. HOUSING-B : PBT UL94V-0 ; COLOR : BLACK
   1-3. O-RING-A : EPDM ; COLOR : BLACK
   1-4. O-RING-B : EPDM ; COLOR : BLACK
   1-5. NUT : BRASS
   1-6. SHELL : BRASS
   1-7. CONTACT : BRASS
2. FINISH :
   2-1. CONTACT : 10 MICRO INCHES MIN. GOLD PLATED
   UNDER PLATE : NICKEL
   2-2. NUT : NICKEL PLATED
   2-3. SHELL : NICKEL PLATED
3. ELECTRICAL SPECIFICATION :
   3-1. Rated current : 5A
   3-2. Rated Voltage : 125V
   3-3. Water proof: IPX7
4. Environmental :
   4-1. Operation Temperature : -20℃~85℃

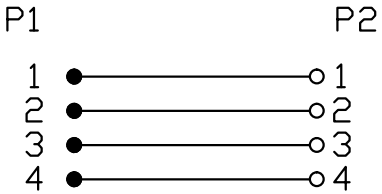

Circuit diagram

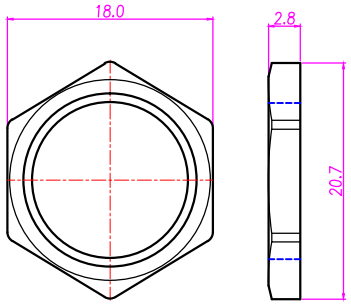

NUT

DRAWN	NEIL	APPEND	KUNG	UNIT	mm	TOLERANCE .x ±0.20 .xx ±0.10 .xxx ±0.05 .xxxx ±0.03 ANGULA ±1°	JKL TECHNOLOGY CO. , LTD	TITLE	M12 4 PIN MALE/FEMALE WATERPROOF ADAPTOR		SHEET 1/1
CHOKED	TIM			SCALE	1:1			PART NO.	N-10008	DWG NO.	VERSION A